LTR	Zone	REVISION RECORD / Description	DWN/CHK	DATE	LTR	Zone	REVISION RECORD / Description	DWN/CHK	DATE
1		New Release		Jun/14/05					
2	E-4	Add EMI CORE (4*2*10)		Jun/20/05					
3	E-3	Modify EMI CORE (4*2*10=>6*2*25)/position		Jul/05/05					

DRAWING NUMBER
J63_13037W+I32

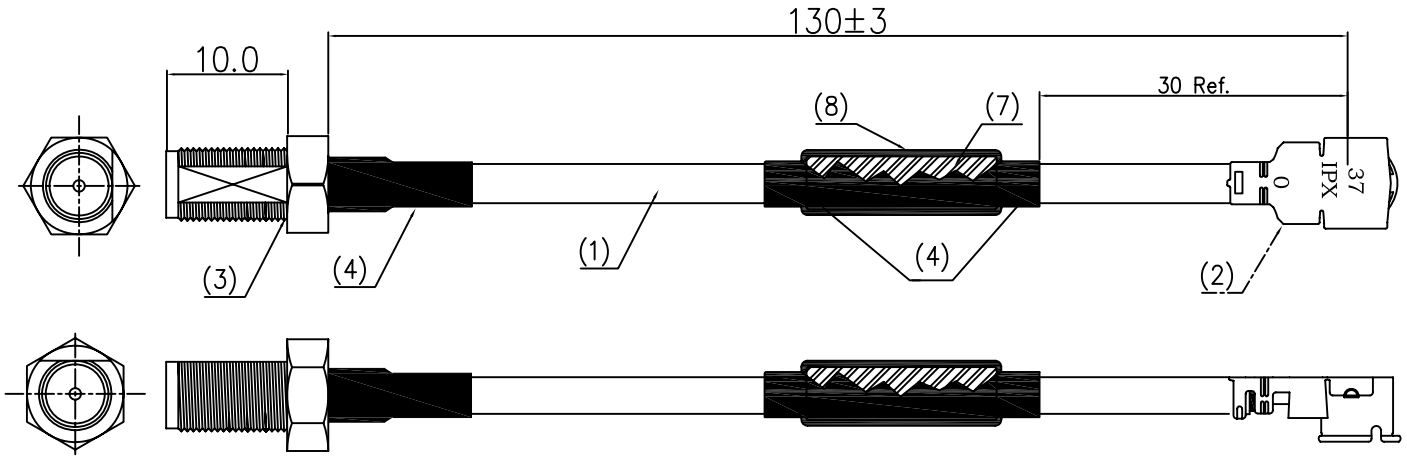

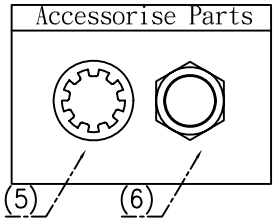

NO	DESCRIPTION	Q'ty	MATERIAL	Part Number
10				
9				
8	SHRINK TUBE (ø7*35) Black	1		M05-070003-BL
7	CORE ø6*ID2 *L25mm	1		M07-060202-00
6	NUT Gold Plated	1	BRASS	
5	TOOTH WASHER Gold plated	1	BRASS	
4	SHRINK TUBE (ø3.0-3.5) BLACK	3		M05-030G03-BL
3	RP-SMA-JACK (10mm) Blk Special	1	BRASS	M01-054SPC-37
2	I-PEX PLUG (20351-111R-37)	1	BRASS	M01-MHF137-00
1	COAXIAL CABLE ø1.37 White	1	BRASS	M02-137GBR-WH

UNIT mm	APVD	DESCRIPTION: JC SMA(FM)-137(W)IPEX L130mm+Core	
MATERIAL SEE NOTE	CHK	DIMENSION: 1 PLC ±0.5, 2 PLC ±0.3, 3 PLC ±0.2, ANGLES ±5°	PART NUMBER J63_13037W+I32 / REV 3
FINISH SEE NOTE	DWN KIKI		SIZE A4 / SCALE 1/1 / SHEET 1 OF 1